DIFFERENTIAL FREQUENCY TRANSDUCER *MODEL* DFD-

FEATURES

- Frequency measurement of sinusoidal and distorted waveforms.
- Compact DIN rail package. CE and CSA approvals.

APPLICATIONS

- Where frequencies of two different power systems need to be compared.
- SCADA, generation and co-generation.

MODEL SELECTION

INPUT FREQUENCY (Hz)		STANDARD OUTPUTS MODEL DFD-				
Fs	FG	0-1mAdc	0-10Vdc	0-5Vdc	4-20mAdc	0-20mAdc
50	45-55	050B	050D	050X5	050E	050EA
60	55-65	060B	060D	060X5	060E	060EA
400	375-425	400B	400D	400X5	400E	400EA

All standard models require instrument power.
Additional frequency and voltage ranges available - consult factory

ORDERING INFORMATION

Example: Power System Frequency 60Hz, Generator Frequency 55-65Hz, with 0-5Vdc Output

DFD - 060X5

DIN Rail lengths available - consult factory

SPECIFICATIONS

INPUT

Frequency Range.....See Table
Voltage Range.....10-230Vac
Overload .....Continuous ..... 120% F.S.
1 sec. ..... 200% F.S.
Burden..... <1.0VA

OUTPUT

Output Loading.. 0-1mA 0-15KΩ
0-10Vdc, 0-5Vdc ..... 2.5kΩ min.
4-20mA, 0-20mA..... 0-750Ω
Response Time ..... 4 Periods of Input Frequency

INSTRUMENT POWER

Standard.....85-230Vac/dc, 50/60Hz, 4.0VA

DIELECTRIC TEST

Input to Instrument Power/Output/Case 3700Vac
Instrument Power to Output/Case.....3700Vac
Output to Case 490Vac

ACCURACY

50Hz., 60Hz. Models ..... ±0.02Hz.
400Hz. Model ..... ±0.1Hz.
Output Ripple ..... <0.5% pk-pk

PHYSICAL

Temperature Range .....-10°C to +55°C
Termination..... #10 AWG max.
Weight .....0.75 lbs.

CASE DIMENSIONS AND CONNECTION DIAGRAM

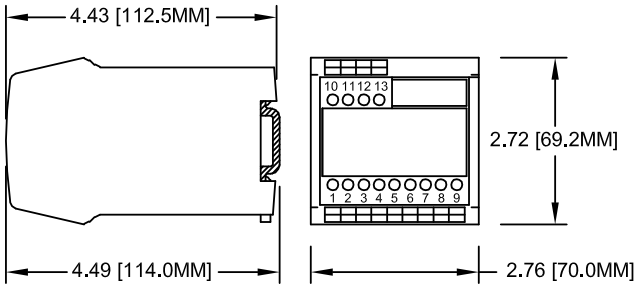

NOTES:
1. DIMENSIONS ARE IN INCHES [MM].
2. MOUNTED ON 35MM TOP-HAT DIN RAIL.

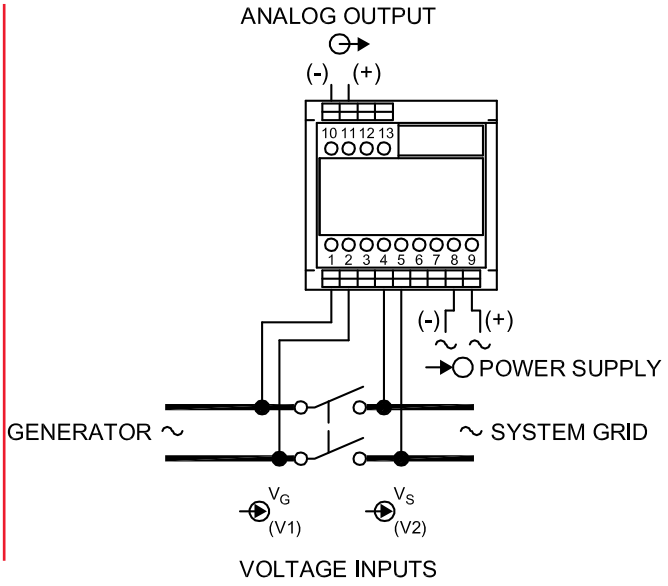

Dwg #0902-00899-B Rev --

OHIO SEMITRONICS, INC.
4242 REYNOLDS DRIVE * HILLIARD, OHIO * 43026-1264
PHONE: (614) 777-1005 * FAX: (614) 777-4511
WWW.OHIOSEMITRONICS.COM * 1-800-537-6732